TI00368C/07/EN/14.20
71478863
2020-04-30

Technical Information
Cleanfit COA451

Manually operated retractable assembly for water, wastewater and process media

Application

Cleanfit COA451 is a retractable assembly for oxygen sensors with a diameter of 40 mm in:

- Wastewater treatment plants:
  - Oxygen control in activated sludge basins
  - Treatment and monitoring of process water
- Water works:
  - Status monitoring for drinking water
  - Water quality monitoring in rivers, lakes or seas
- All industrial utilities:
  - Oxygen control in biological treatment
  - Treatment and monitoring of process water
- Fish farming:
  Oxygen monitoring for optimum growth conditions

Your benefits

- One assembly for all applications: the 'one-for-all' principle optimizes inventory management, accelerates project handling and simplifies life cycle management.
- Easy and safe maintenance: sensor servicing and cleaning without interrupting the process.
- Robust design: process pressure up to 10 bar (145 psi), manual operation up to 2 bar (29 psi).
- Convenient, time-saving operation: rinse water connection enables cleaning without having to remove the sensor from the process.

Endress+Hauser
People for Process Automation

Table of contents

Function and system design 3
Structure of the assembly 3
Structure of the sensor holder 3
Measuring system 5

Installation 5
Orientation 5
Installation instructions 5

Environment 6
Ambient temperature 6

Process 6
Medium temperature 6
Medium pressure 6
Pressure-temperature ratings 6

Mechanical construction 7
Dimensions 7

Certificates and approvals 11
CE/PED 11

Ordering information 11
Product page 11
Product Configurator 11
Scope of delivery 12

Accessories 12
Device-specific accessories 12
Service-specific accessories 14
Accessory kits 14

Function and system design

The assembly is operated manually.

The vent cock or the the rinse connections (if used) are in open contact with the medium in the measuring position and when the assembly is retracted/inserted, and are therefore exposed to the process pressure.

The vent cock or the rinse connections (if used) must be closed when inserting/retracting the assembly.

In the service position (sensor moved back into the assembly as far as possible and ball valve closed), the assembly is sealed from the process by the ball valve.

This means that cleaning, calibration or sensor replacement can be performed without interrupting the process.

The assembly can be inserted/retracted manually at process conditions up to a process pressure of approx. 2 bar (29 psi).

Structure of the assembly

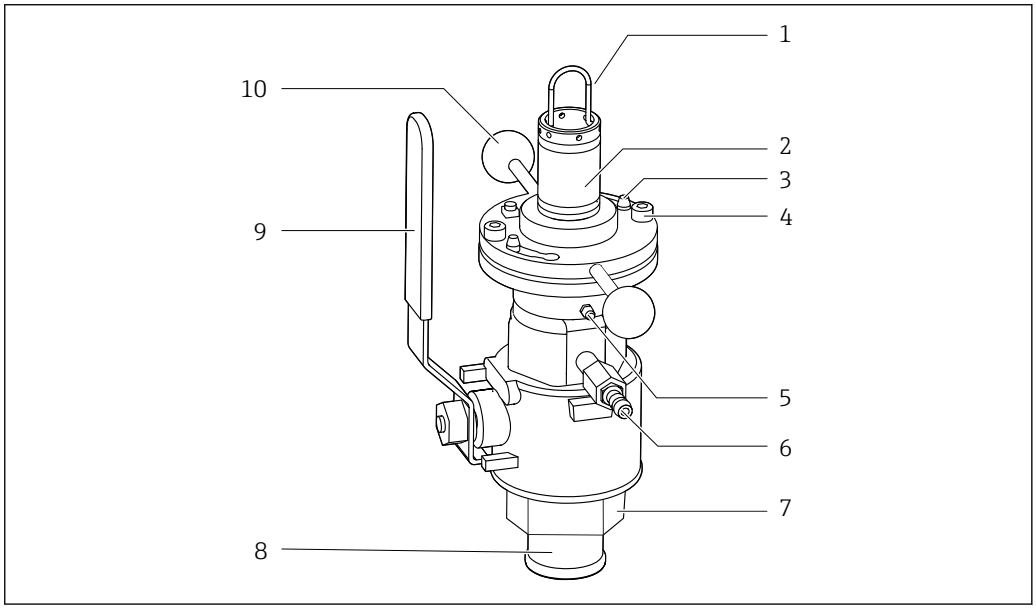

1 Assembly in operational state (ball valve open)

1 *Bracket for sensor holder*
2 *Sensor holder*
3 *Bayonet lock*
4 *Securing screws*
5 *Grease nipple*
6 *Ball valve/valve for venting or rinse connection*
7 *Process connection*
8 *Retraction pipe*
9 *Hand lever for opening/closing the ball valve*
10 *Handles*

An additional rinse chamber valve can be mounted in the locking screw opposite the vent valve.

Structure of the sensor holder

The sensor holder is used to position the sensor correctly in order to ensure correct measuring accuracy.

If the sensor is not positioned correctly, the ball valve may be blocked or the sensor may be located in the dead space as a result.

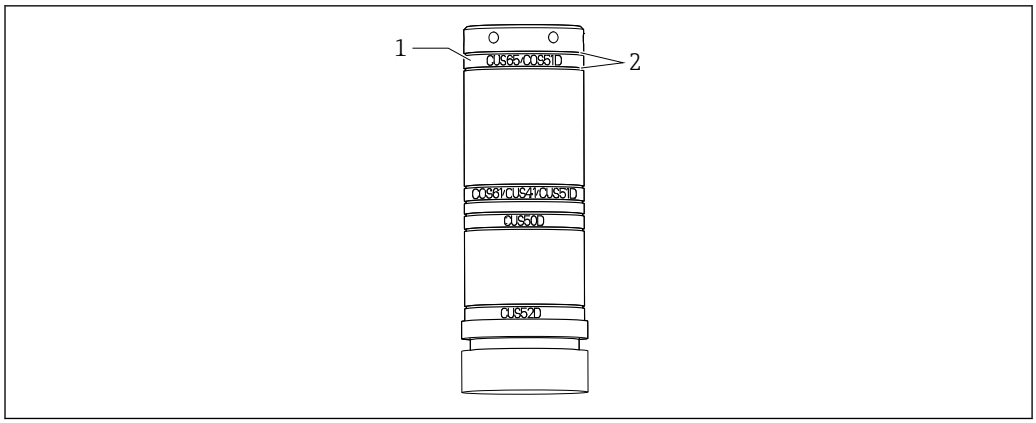

A0038451

2 Short sensor holder

1 Mounting position of the bayonet nut to hold the relevant sensor
2 Grooves of the safety rings to mount the bayonet nut

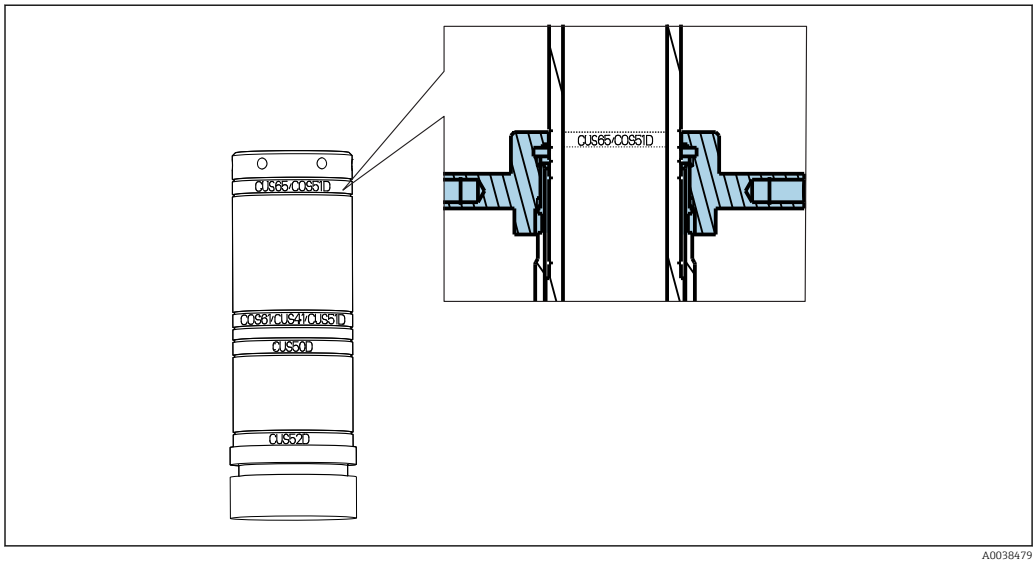

A0038479

3 Mounting position of the bayonet nut for CUS65D or COS51D

The name indicated on the holder serves as a mounting aid. The bayonet nut covers over the marking for the selected sensor position.

Measuring system

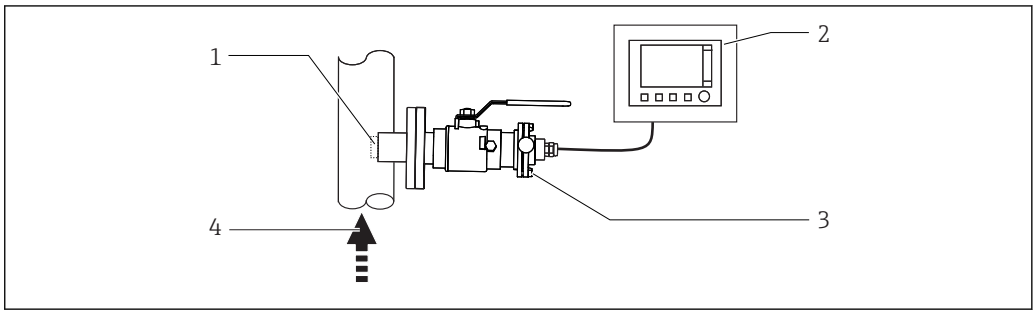

4 Orientations, schematic

1 Sensor (see Accessories)
2 Transmitter
3 Retractable assembly
4 Direction of flow

The orientation depends on the sensor head. Pay attention to the Operating Instructions for the relevant sensor. An inclination of at least 15° is recommended for amperometric sensors

- Make sure to avoid a siphon effect at the rinse chamber outlet. The inflow to the rinse chamber is always from below.

Installation

Orientation

The following diagram shows different installation positions in pipes, and indicates whether they are permitted or not.

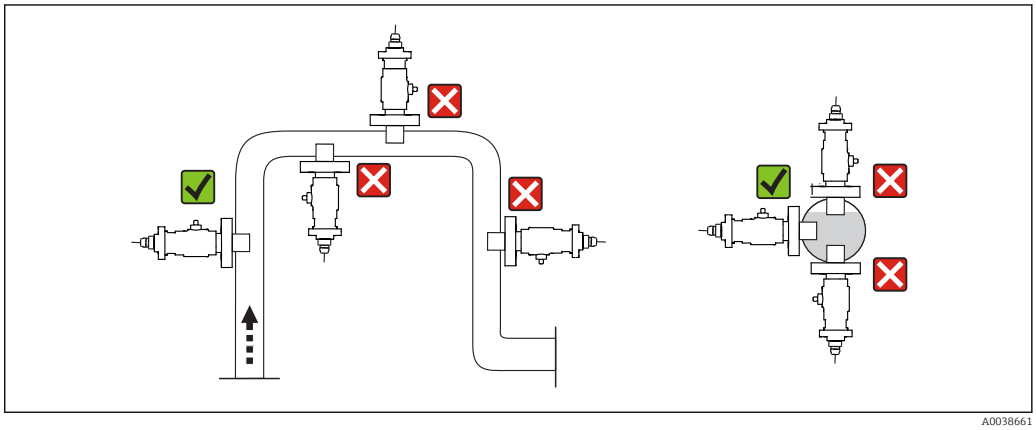

5 Schematic of installation positions and orientations

- Ideally, the assembly should be mounted in an ascending pipe. Installation in a horizontal pipe is also possible.

- Install the sensor in places with uniform flow conditions.
- Do not install the sensor in places where air may collect or foam bubbles form or where suspended particles may settle.
- Avoid installation in the down pipe.
- Avoid fittings downstream from pressure reduction stages which can lead to outgassing.

Installation instructions

- Install the assembly in places with uniform flow conditions. The minimum pipe diameter is DN 80.

The installation instructions depend on the sensor used.

Detailed installation instructions are provided in both the Technical Information and in the Operating Instructions for the particular sensor.

Environment

Ambient temperature

0 to 50 °C (32 to 122 °F)

Process

Medium temperature

0 to 85 °C (32 to 185 °F)

Medium pressure

Max. 10 bar (145 psi)

For manual insertion/retraction of the assembly, the medium pressure must not exceed 2 bar (29 psi)! Also take the process conditions of the sensor used into consideration!

Pressure-temperature ratings

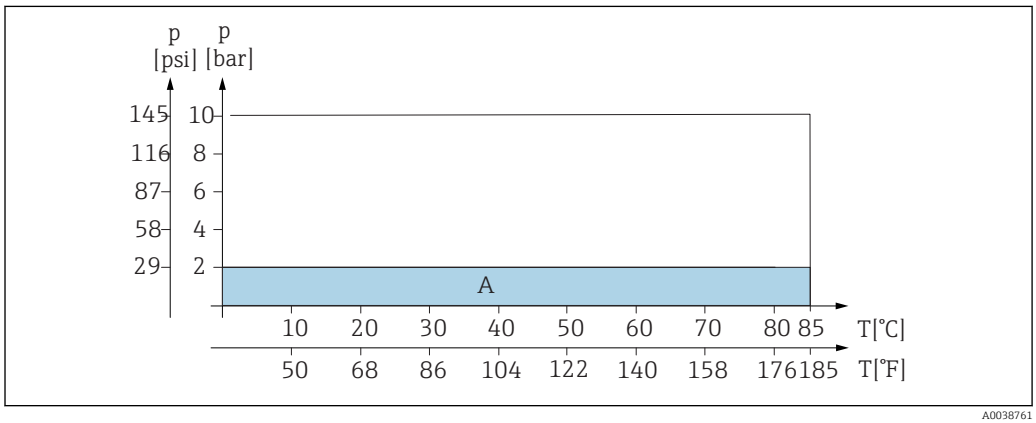

6 Pressure/temperature ratings

A Range in which the assembly can be operated manually

Mechanical construction

Dimensions

Assembly with G2 thread and weld-in adapter in measuring position (long and short stroke)

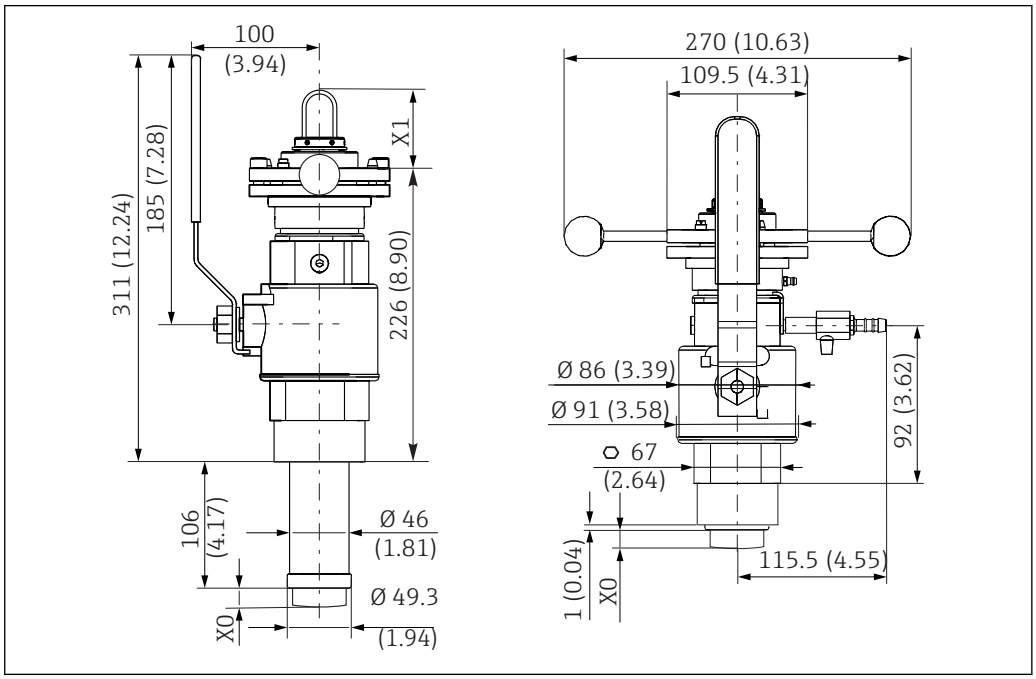

7 Dimensions in mm (in)

X0, X1 Dimensions depend on the sensor

Assembly with G2 thread and weld-in adapter in service position (long and short stroke)

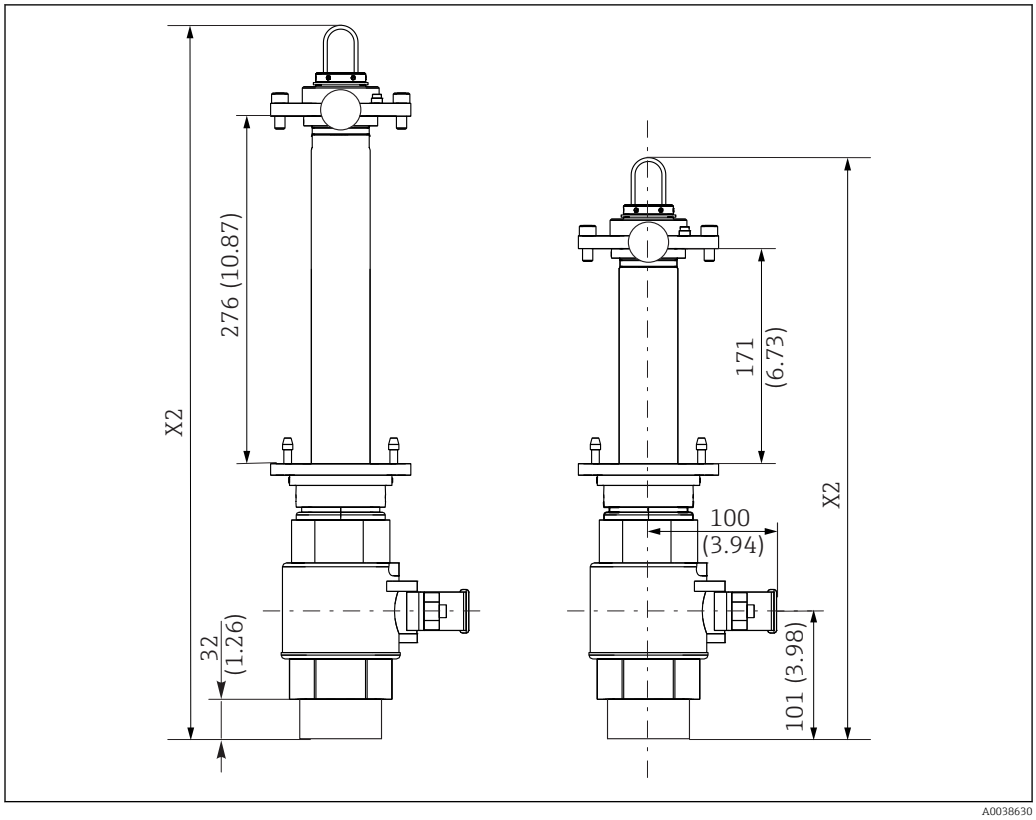

8 Dimensions in mm (in)

X2 Dimensions depend on the sensor

Assembly with flange connection

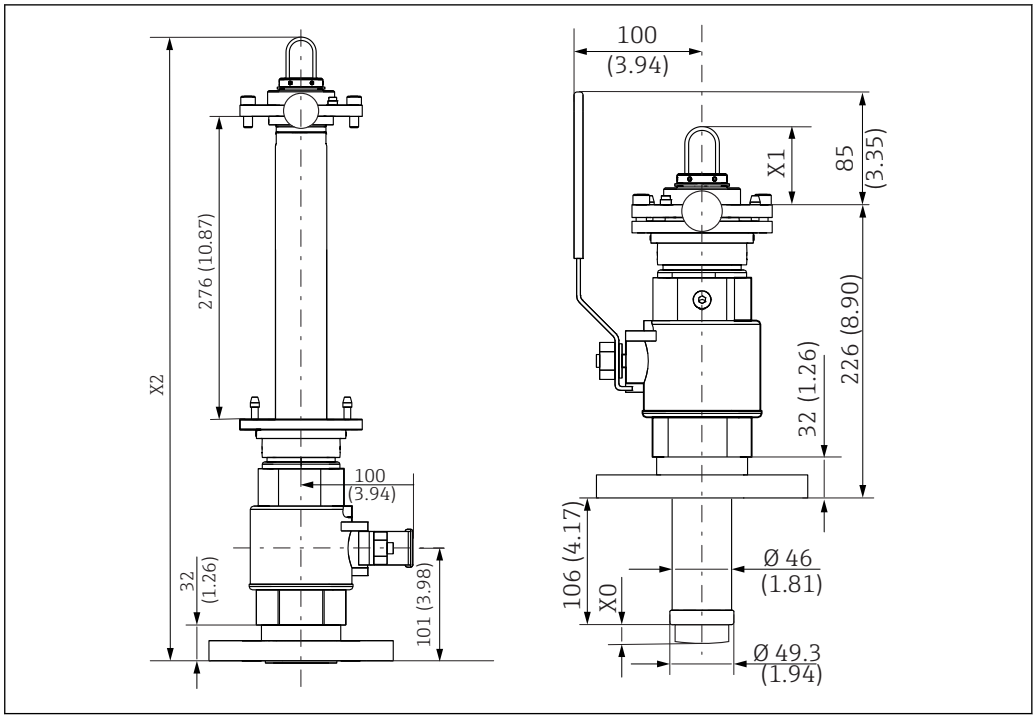

9 Dimensions in mm (in)

X0, X2 Dimensions depend on the sensor

Sensor	X0
CUS52D	25 (0.98)
CUS50D	26 (1)
CUS41/	16 (0.63)
CUS51D	5 (0.2)
COS61D	12 (0.47)
CUS65	21 (0.83)
COS51D	12 (0.47)

Sensor measuring position	X1
CUS52D	139 (5.47)
CUS50D	110 (4.33)
CUS41/CUS51D, COS61D	101 (3.98)
CUS65, COS51D	59 (2.32)

Sensor service position, long	X2
CUS52D	638 (25.12)
CUS50D	609 (23.98)

Sensor service position, long	X2
CUS41/CUS51D, COS61D	600 (23.62)
CUS65, COS51D	558 (21.97)

Sensor service position, short	X2
CUS52D	533 (20.98)
CUS50D	504 (19.84)
CUS41/CUS51D, COS61D	495 (19.49)
CUS65, COS51D	453 (17.83)

Sensor holder with sensors

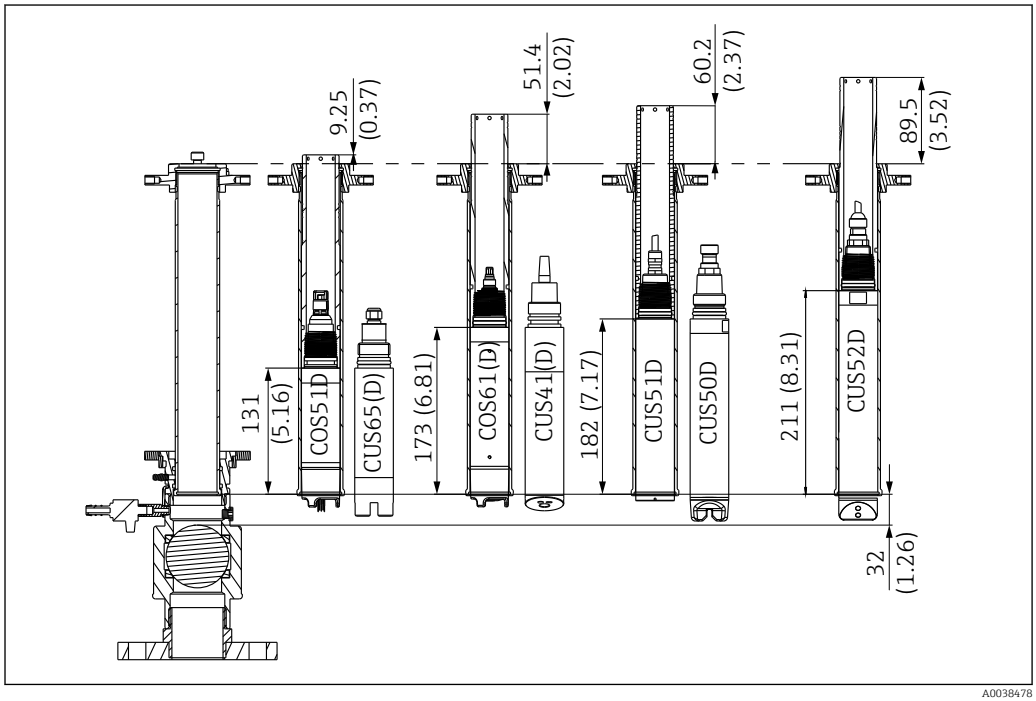

10 Dimensions of sensor holder with sensors in mm (in)

Process connections

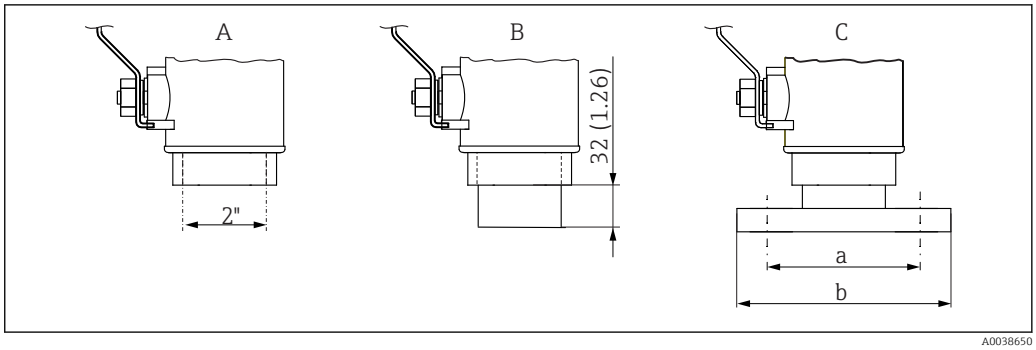

11 Dimensions of process connections in mm (in)

A G2" female thread
B G2" female thread with weld-in adapter
C Flange DN 50 / PN 16 (as per EN 1092-1) and flange ANSI 2" / 150 lbs
a DN 50: Ø 125 (4.92), ANSI 2": Ø 120.7 (4.75)
b DN 50: Ø 165 (6.50), ANSI 2": Ø 152.4 (6.00)

Rinse connection and vent cock

Rinse connection nozzles
Connection options:
- 2 x ball valve with hose connection OD 9mm (see "Accessories"). (A ball valve is included in the delivery for the assembly. On its own it acts as a vent cock.)
- Customer's own rinse connections with G1/8 external thread
- 2 x G1/8 (internal)

Vent cock
Ball valve with hose connection OD 9 mm

Weight

Depending on version: 8 to 11 kg (17.6 to 24.3 lbs)

Materials

Wetted:	Viton (seals)
	Stainless steel 1.4404 (AISI 316 L)
	Nickel-plated brass (vent cock or rinse connection)
Not wetted:	Stainless steel 1.4404 (AISI 316 L)

Certificates and approvals

CE/PED

The assembly has been manufactured according to good engineering practice as per Article 4, Paragraph 3 of the Pressure Equipment Directive 2014/68/EU and is therefore not required to bear the CE label.

Ordering information

Product page

www.endress.com/CUA451

Product Configurator

On the product page there is a **Configure** button to the right of the product image.

1. Click this button.
   ↳ The Configurator opens in a separate window.

2. Select all the options to configure the device in line with your requirements.
   ↳ In this way, you receive a valid and complete order code for the device.
3. Export the order code as a PDF or Excel file. To do so, click the appropriate button on the right above the selection window.

For many products you also have the option of downloading CAD or 2D drawings of the selected product version. Click the **CAD** tab for this and select the desired file type using picklists.

Scope of delivery

The delivery comprises:
- Assembly in the version ordered
- Operating Instructions

Accessories

Device-specific accessories

Sensors

Oxymax COS41
- Oxygen sensor for drinking water and industrial water measurement, amperometric measuring principle
- Material: POM
- Product Configurator on the product page: www.endress.com/cos41

Technical Information TI00248C

Oxymax COS51D
- Amperometric sensor for dissolved oxygen
- With Memosens technology
- Product Configurator on the product page: www.endress.com/cos51d

Technical Information TI00413C

Oxymax COS61
- Optical oxygen sensor for drinking water and industrial water measurement
- Measuring principle: quenching
- Material: stainless steel 1.4571 (AISI 316Ti)
- Product Configurator on the product page: www.endress.com/cos61

Technical Information TI00387C

Oxymax COS61D
- Optical oxygen sensor for drinking water and industrial water measurement
- Measuring principle: quenching
- With Memosens technology
- Product Configurator on the product page: www.endress.com/cos61d

Technical Information TI00387C

Welding socket

Welding socket
- Welding socket for pipe diameter from 80 mm, with combination flange DN 50 / ANSI 2":
  - Bores for DN 50 flange: 4 x 90° Ø18 on bolt circle Ø125 (4.92)
  - Bores for ANSI 2" flange: 4 x 90° Ø19 on bolt circle Ø121 (4.75)
- Flange seal, 4 screws M16x60, 4 M16 nuts including washers,
- Stainless steel 1.4571 (AISI 316 Ti)
- Order No. 50080249

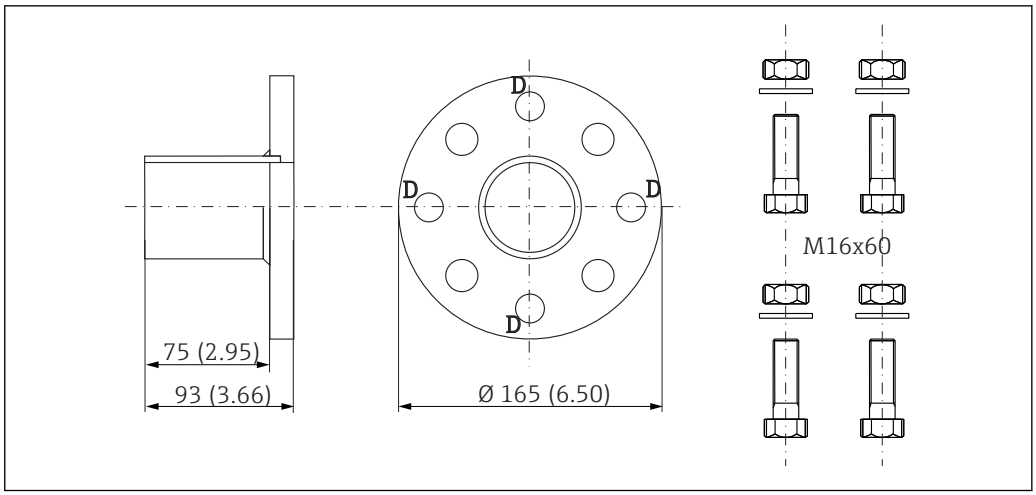

12 Welding socket, dimensions in mm (in)

D Markings for bores, DN 50 flange

Welding nipple

- Welding nipple for 2" thread
- Stainless steel 1.4404 (AISI 316 L)
- Order No. 71448684

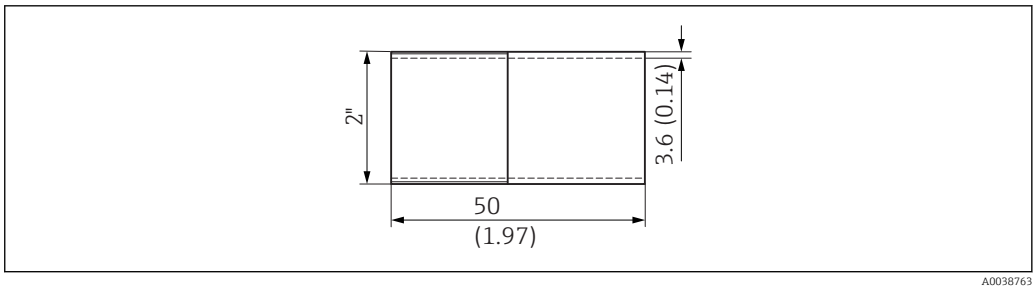

13 Welding nipple, dimensions in mm (in)

Welding rinse socket DN 65

- For automatic spray cleaning of CUS51D/31/41 sensors in pipes and vessels:
  - Bores for DN 50 flange: 4 x 90° Ø18 on bolt circle Ø125
  - Bores for ANSI 2" flange: 4 x 90° Ø19 on bolt circle Ø121
- Rinse connection: male thread R¼
- With removable rinse nozzle
- Up to 6 bar (87 psi), 80 °C (176 °F)
- Order No. 51500912

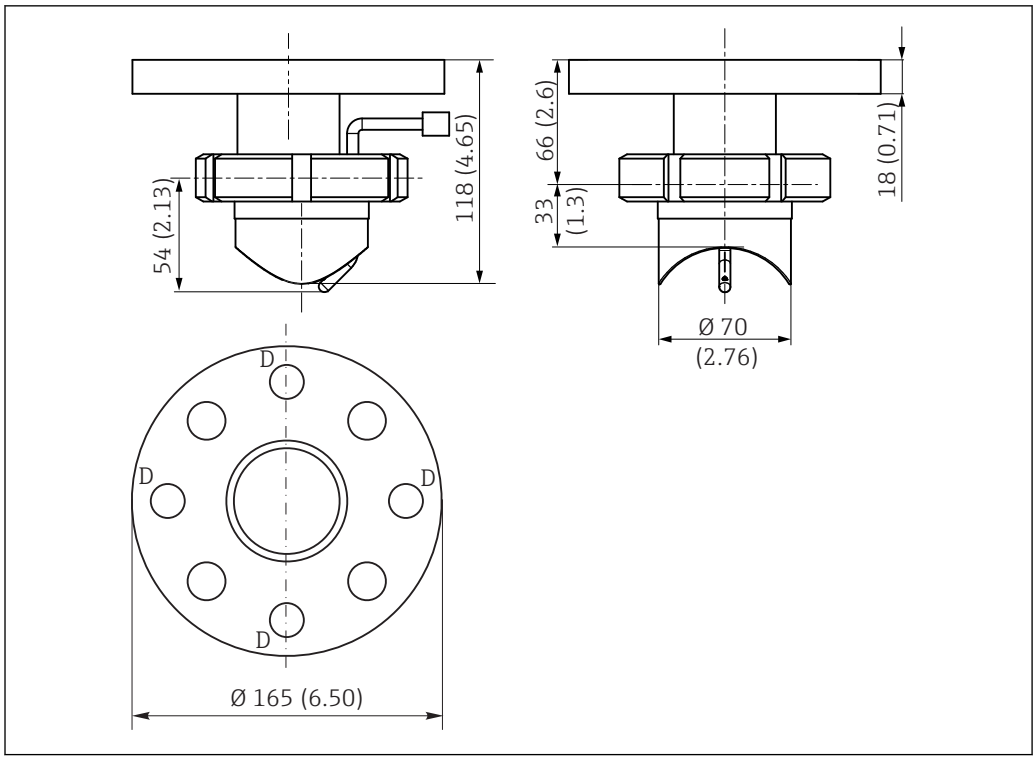

14 Welding rinse socket, dimensions in mm (in)

D Markings for bores, DN 50 flange

Service-specific accessories

Accessory kits

Ball valve for rinse chamber
- As rinse connection complementing or replacing the vent cock supplied;
- Order No. 51512982

O-ring set
- Viton + FPM
- Order No. 51512981

中国E+H技术销售 www.ainstru.com
电话：18923830905
邮箱：sales@ainstru.com

Endress+Hauser
People for Process Automation